SIEMENS

7435

ISO 9001

Burner Controls LGB...

Burner controls for the supervision of single- or 2-stage gas or gas / oil burners of small to medium capacity (typically up to 350 kW), with or without fan assistance in intermittent operation.

The LGB... and this Data Sheet are intended for use by OEMs which integrate the burner controls in their products!

Use

The LGB... burner controls are used for the startup and supervision of single- or 2-stage gas or gas / oil burners in intermittent operation.
Depending on the type of burner control used, the flame is supervised either by an ionization probe, a blue-flame detector QRC1... for forced draft gas / oil burners, or a UV detector QRA... (with auxiliary unit AGQ1...A27).

In connection with the respective adapters, the LGB... burner controls replace their predecessor types LFI7... and LFM1... (also refer to «Replacement types» under «Ordering»).

- Automatic forced draft burners for gaseous fuels to EN 676
- Gas burner controls to EN 298
- Undervoltage detection
- Air pressure supervision with functional check of the air pressure monitor during startup and operation
- Electrical remote reset facility
- LGB41... for use with atmospheric gas burners

Warning notes

To avoid injury to persons, damage to property or the environment, the following warning notes should be observed!
Do not to open, interfere with or modify the unit!

- Before performing any wiring changes in the connection area of the LGB..., completely isolate the burner control from the mains supply (all-polar disconnection)
- Ensure protection against electric shock hazard by providing adequate protection for the burner control's terminals
- Check wiring and all safety functions
- Press lockout reset button only manually, without using any tools or pointed objects
- Fall or shock can adversely affect the safety functions. Such units may not be put into operation, even if they do not exhibit any damage

Mounting notes

- Ensure that the relevant national safety regulations are complied with
- Locate the ignition electrode and the ionization probe such that the ignition spark cannot arc over to the ionization probe (risk of electrical overloads) and that it cannot adversely affect the supervision of ionization

Installation notes

- Installation work must be carried out by qualified staff
- Always run the ignition cables separate from the unit and other cables while observing the greatest possible distance
- Install switches, fuses, earthing, etc., in compliance with local regulations
- Ensure that the maximum permissible amperages will not be exceeded (refer to «Technical data»)
- Do not feed external mains voltage to the control outputs of the unit. When testing the devices controlled by the burner control (fuel valves, etc.), the LGB... may never be connected
- Make certain that live and neutral conductors are correctly connected to terminals 1 and 2, or else no flame signal will be generated
- To isolate the burner control from the mains supply, use an all-polar switch with a contact gap of at least 3 mm
- Secure the earthing lug in the base with a metric screw and a lockwasher
- The connection diagrams show the burner controls with an earthed neutral conductor. In networks with nonearthed neutral conductor and ionization current supervision, terminal 2 must be connected to the earth conductor via an RC unit (type reference ARC 4 668 9066 0)
- In the case of burners with no fan assistance, the AGK25 must be connected to terminal 3 as a burden, or else the burner cannot reliably start
- For safety reasons, feed the neutral conductor to the neutral distributor in the plug-in base, or to terminal 2. Connect the burner components (fan, ignition transformer and gas valves) to the neutral distributor as shown below. The connection between neutral conductor and terminal 2 is prewired in the base

Example

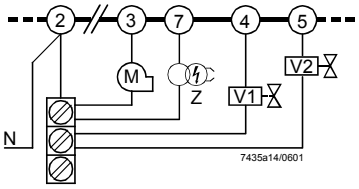

Correct wiring of neutral conductors!

Legend

V...	Fuel valve
M	Fan motor
Z	Ignition transformer

Electrical connection of ionization probe and flame detector

It is important to achieve practically disturbance-free and loss-free signal transmission:

- With both ionization current and UV supervision, the cable length for flame detection may not exceed 20 m
- Observe the permissible length of the detector cables (refer to «Technical data»)
- Never run detector cables together with other cables
  – Line capacitance reduces the magnitude of the flame signal
  – Use a separate cable
- Insulation resistance
  – Must be a minimum of 50 MΩ between ionization probe and ground
  – Soiled detector holders reduce the insulation resistance, thus supporting creepage currents
  – Prerequisite is not only high quality heat-resistant insulation of the probe's cable, but also of the ionization probe itself (ceramic holder)
- Earth the burner in compliance with the relevant regulations; earthing the boiler alone does not suffice
- The ionization probe and the ignition electrode are not protected against electric shock hazard

Commissioning notes

- Commissioning and maintenance work must be carried out by qualified staff
- When commissioning the plant for the first time or when doing maintenance work, make the following safety checks:

	Safety check to be carried out	Anticipated response
a)	Burner startup with previously interrupted line to the ionization probe	Lockout at the end of «TSA»
b)	Burner operation with simulated loss of flame; for that purpose, cut off the gas supply (e.g. disconnect the fuel valve while ensuring protection against electric shock hazard)	Immediate lockout
c)	Burner operation with simulated air pressure failure (not with atmospheric burners)	Immediate lockout

Disposal notes

The unit contains electrical and electronic components and may not be disposed of together with household garbage.
Local and currently valid legislation must be observed.

Mechanical design

The housing is made of impact-proof, heat-resistant and flame-retarding plastic.
It is of plug-in design (measuring 91 x 62 x 63 mm, including the base) and engages audibly in the base.

The housing accommodates the
- programming mechanism with the synchronous motor
- electronic flame signal amplifier (ionization) with the flame relay and the other switching devices
- lockout reset button with its integrated fault indication lamp

Type summary

The type references given below apply to LGB... burner controls without plug-in base and without flame detector.
For ordering information on plug-in bases and other accessories, refer to «Mechanical design», «Ordering», «Flame supervision ...» and «Technical data».

Flame detector	Type reference	Approved in:	tw/s ca.	t1/s min.	TSA/s max.	t3n/s ca.	t3/s ca.	t4/s ca.	t9/s 6) max.	t10/s min.	t11/s 3) max.	t12/s 3) max.	t20/s ca.
Burner controls for prepurging with low-fire air volume and control of the actuator													
Ionization probe (FE) or UV detector QRA... with AGQ1...A27	**LGB21.130A27** 4)7)	CH, EU, S, SF	8	7	3	2.4	2	8	---	5	---	---	6
	LGB21.230A27 5)	CH, EU, S, SF	8	15	3	2.4	2	8	---	5	---	---	38
	LGB21.330A27 5)	CH, EU, H, S, SF	8	30	3	2.4	2	8	---	5	---	---	23
	LGB21.350A27 5)7)	CH, EU, H, S, SF	8	30	5	4	2	10	---	5	---	---	21
	LGB21.550A27 5)	AUS, CH, EU	8	50	5	4	2	10	---	5	---	---	2
Burner controls for prepurging with nominal load air volume and control of the actuator													
Ionization probe (FE) or UV detector QRA... with AGQ1...A27	**LGB22.130A27** 4)	CH, EU, N, S	9	7	3	2.4	3	8	---	3	12	12	21
	LGB22.230B27 5)	CH, EU, N, S, SF	9	20	3	2.4	3	8	---	3	16.5	16.5	2
	LGB22.330A27 5)7)	AUS, CH, EU, H, N, S, SF	9	30	3	2.4	3	8	---	3	12	11	2
	LGB22.330A270 5)8)	EU	9	30	3	2.4	3	8	---	3	12	11	2
Blue-flame detector QRC1...	**LGB32.130A27** 4)1)	CH, EU	9	7	3	2.4	3	8	---	3	12	12	21
	LGB32.230A27 5)1)	CH, EU	9	20	3	2.4	3	8	---	3	16.5	16.5	2
	LGB32.330A27 5)	CH, EU	9	30	3	2.4	3	8	---	3	12	11	2
	LGB32.350A27 5)	CH, EU	9	30	5	4.4	1	10	---	3	12	9	2
Burner controls for atmospheric burners													
Ionization probe (FE) or UV detector QRA... with AGQ1...A27	**LGB41.255A27**	EU	18	---	5	4	2	10	5	---	---	---	10
	LGB41.258A27 2)5)7)	CH, EU, H, SF	18	---	5	4	2	10	9	---	---	---	10

Legend

tw	Waiting time
t1	Prepurge time
TSA	Ignition safety time
t3	Preignition time
t3n	Postignition time
t4	Interval «BV1-BV2» or «BV1-LR»
t9	Second safety time (only with LGB41...)
t10	Specified time for air pressure signal
t11	Programmed opening time for actuator «SA»
t12	Programmed closing time for actuator «SA»
t20	Interval up to self-shutdown of the programming mechanism

1) On request
2) For atmospheric burners up to 120 kW
3) Maximum running time available for actuator
4) Also suited for flash steam generators
5) Also suited for stationary direct fired air heaters
6) «t9» + reaction time of flame relay
7) Also available for AC 100...110 V; in that case, the last 2 digits read ...17 in place of ...27
8) Without internal microfuse; only to be used in connection with an external microfuse 6.3 A (slow)!

Ordering

Burner control refer to «Type summary»

Electrical connections refer to Data Sheet 7201
- Plug-in base AGK11
- Cable holders AGK65, AGK66, AGK67...
- Cable strain relief elements for AGK67...

Electrical connections refer to Data Sheet 7203
- Plug-in base AGK13
- Plug-in housing AGK56
- Accessories AGK68

Flame detectors
- Ionization probe supplied by thirds
- UV detectors QRA... refer to Data Sheet 7714
- Blue-flame detectors QRC1... refer to Data Sheet 7716

RC unit **ARC 4 668 9066 0**
For the supervision of ionization currents in networks with nonearthed neutral conductor

PTC resistor (AC 230 V) **AGK25**
To burden terminal 3 (mandatory when using burners with no fan motor connected to terminal 3)

Auxiliary unit for UV supervision
- Cable length 500 mm **AGQ1.1A27**
- Cable length 300 mm **AGQ1.2A27**

Can be fitted under the plug-in base (refer to «Dimensions»)

Pedestal **AGK21**
For increasing the height of the LGB... to that of the LFM... or LFI7...
(refer to «Dimensions»)

Service adapter **KF8872**
For checking the functioning of the burner controls on the burner plant
– Functional test with signal lamps
– Detector resistance measurement with a jack of 4 mm diameter

Test case **KF8843**
- For checking the functions of the burner control

Adapters / replacement types
No rewiring required

LGB21... with adapter	KF8852		LFI7...
	KF8880		LFM1... LFM1...-F
LGB22... with adapter	KF8853-K		LFI7...
	KF8880		LFM1...
LGB41... with adapter	KF8862		LFM1...

Technical data

General unit data **LGB...**	Mains voltage	AC 220 V –15 % ...AC 240 V +10 % (LGB2... / LGB4...) AC 230 V –15 % / +10 % (LGB32..!) AC 100 V –15 % ...AC 110 V +10 %
	Mains frequency	50...60 Hz ±6 %
	Input current at terminal 12	max. 5 A within the permissible voltage range AC 187...264 V or AC 195...253 V
	Current rating	
	- Terminal 3	max. 3 A (15 A for max. 0.5 s)
	- Terminals 4, 5 and 7	max. 2 A
	- Terminals 9 and 10	max. 1 A
	- Terminal 12	max. 5 A (at Umax. AC 264 V or AC 253 V)
	Cable length terminals 8 and 10	20 m at 100 pF / m
	Perm. cable lengths	max. 3 m at 100 pF / m line capacitance
	Detector cable laid separately	20 m
	Power consumption	3 VA
	Primary fuse	max. 10 A (slow)
	Degree of protection	IP 40
	Mounting position	optional
	Weight	approx. 230 g

Norms and standards	**Environmental conditions**	
	Transport	IEC 721-3-2
	Climatic conditions	class 2K2
	Mechanical conditions	class 2M2
	Temperature range	-50...+60 °C
	Humidity	< 95 % r.h.
	Operation	IEC 721-3-3
	Climatic conditions	class 3K5
	Mechanical conditions	class 3M2
	Temperature range	-20...+60 °C
	Humidity	< 95 % r.h.
⚠	**Condensation, formation of ice and ingress of water are not permitted!**	

CE conformity	
According to the directives of the European Union	
Electromagnetic compatibility EMC	89 / 336 EEC incl. 92 / 31 EEC
Directive for gas-fired appliances	90 / 396 EEC
Low voltage directive	73 / 23 EEC

Identification code to EN 298	
LGB21... / LGB22...	**FTLLXN** with 2-stage operation
LGB32...	**FMLLXN** with 2-stage operation
LGB41...	**ABLLXN** with 2-stage operation («BV1 + BV2» or «ZBV + BV2»)
	AMLLXN with single-stage operation

Flame supervision with ionization probe

	At mains voltage UN = AC 230 V
Detector voltage across terminals 1 and 2 or ground (AC voltmeter Ri ≥ 10 MΩ)	≤ UN
Detector current required for reliable operation	≥ 3µA
Max. possible detector current in operation	100 µA

The conductivity and the rectifying effect of hot flame gases are used for flame supervision. For that purpose, an AC voltage is applied to the heat-resistant ionization probe which projects into the flame. The current that flows in the presence of a flame (ionization current) produces the flame signal which is fed to the input of the flame signal amplifier. The amplifier is designed such that it responds only to the DC current component of the flame signal, thereby ensuring that a short-circuit between ionization probe and ground cannot simulate a flame signal (since in that case an AC current would flow).

Basically, the flame supervision circuit is insensitive to adverse effects of the ignition spark.

However, should the disturbing effects of the ignition spark on the ionization current exceed a certain level, the electrical connections on the primary side of the ignition transformer must be changed and / or the siting of the ionization probe is to be checked.

Ionization current supervision with burner controls operating on AC 110 V

Since the ionization current with burner controls operating on AC 110 V is only about 50 % of those operating on AC 230 V, certain applications make it necessary to increase the ionization current with a transformer.

Capacity of transformer: min. 2 VA
Transforming ratio: approx. 1.1...1.5
The primary and secondary windings must be galvanically separated.

Connection of transformer

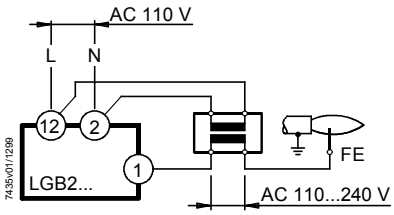

Flame supervision with blue-flame detector QRC1...

Perm. detector current during the prepurge time (dark current)	5 µA
Min. detector current required during operation	50 µA

Measurement circuit with the QRC1...

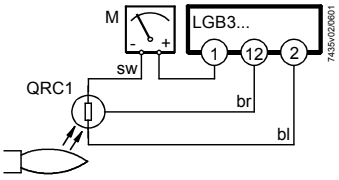

Legend

M	Microammeter Ri max. 5000 Ω
sw	Black wire
br	Brown wire
bl	Blue wire

The QRC1... has been designed specifically for blue-burning flames. Incidence of light from the front and laterally. The flame detector is secured by means of a soft plastic plug. 3-core connection (preamplifier integrated in the detector casing). For the different types of flame detectors, engineering notes and technical data, refer to Data Sheet 7716.

Flame supervision with UV detector QRA... and AGQ... for LGB21... / LGB22... / LGB41...

Mains voltage	AC 220 V –15 %...AC 240 V +10 %
Mains frequency	50...60 Hz ±6 %
Power consumption	4.5 VA
Degree of protection	IP 40
Perm. ambient temperature	
- In operation	-20...+60 °C
- During transport and storage	-40...+70 °C
Perm. length of cable from QRA... to AGQ1...A27 (use separate cable)	max. 20 m
Mounting position	optional
Perm. length of connecting cable from AGQ1...A27 to LGB...	max. 20 m
Weight of AGQ1...A27	approx. 140 g

	At mains voltage U_N:	
	AC 220 V	AC 240 V
Detector voltage at QRA... (with no load)		
Up to the end of «t10» and after a controlled shutdown	DC 400 V	DC 400 V
From the beginning of «t1»	DC 300 V	DC 300 V
Detector voltage **Load by DC measurement instrument Ri > 10 MΩ**		
Up to the end of «t10» and after a controlled shutdown	DC 380 V	DC 380 V
From the beginning of «t1»	DC 280 V	DC 280 V
DC detector signals with UV detector QRA...	**Min. required**	**Max. possible**
Measurement on the QRA...	200 µA	500 µA

Flame supervision with UV detector QRA... and auxiliary unit AGQ... for LGB21... / LGB22... / LGB41...

UV detector QRA...

Universal flame detector for use with gas and gas / oil burners. Incidence of light from the front and laterally. Total length 97 mm. Available with normal or, as QRA2M, with higher sensitivity. Secured with flange and clamp. Also available as a metal encapsulated version in the form of the QRA10... (for details, refer to Data Sheet 7712).

Auxiliary unit AGQ1...A27

A special UV auxiliary unit AGQ1...A27 is required in connection with LGB... burner controls.

That unit is to be connected to the mains supply via 2 cables, and to the burner control via terminals 1, 2 and 11.

Using circuitry (A) or (B), there are 2 ways to make the quench test on ageing UV detectors and to detect UV light:

1. (A) Operation with a permanent line:
   UV test at a higher supply voltage across the UV cell on startup and after a controlled shutdown.
2. (B) Operation with a controlled line:
   UV test at a higher supply voltage only on startup, that is, during the interval between controlled startup and air pressure signal.
   – No voltage at the UV cell after a controlled shutdown
   – No full substitute for mode (A) above, since an aged UV cell can regenerate itself

Measurement circuit

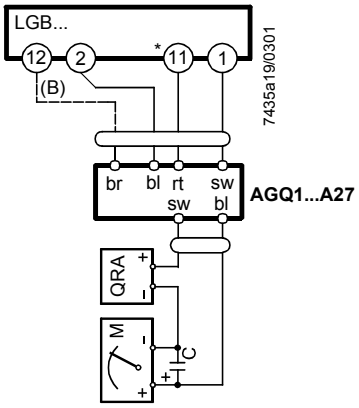

Connection diagram

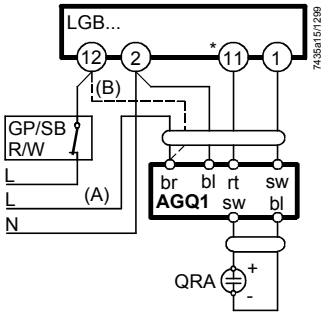

Measurement made on the flame detector

Legend

GP	Gas pressure monitor
R	Temperature or pressure controller
SB	Safety limit thermostat
W	Temperature limiter or pressure monitor
*	With LGB41...: terminal 3
(A)	Operation with a permanent line
(B)	Operation with a controlled line

The function diagrams show the required or permissible input signals to the control section and to the flame supervision circuit hatched (refer to «Connection diagrams»).
If these input signals are missing, the burner control will stop the startup sequence to trigger lockout where required by safety regulations.

Preconditions for burner startup

- Burner control must be reset
- The contacts of gas pressure monitor «GP», limit thermostat / pressure monitor «W», control thermostat / pressure controller «R» and safety limit thermostat «SB» must be closed
- Fan motor «M» or AGK25 must be connected
- Air pressure monitor «LP» must be in its idle position

Undervoltages

LGB... burner controls are capable of detecting **undervoltages**. This means that load relay «AR» will be deenergized if the mains voltage drops below AC 160 V (for nominal AC 220...240 V) or AC 75 V (for nominal AC 100...110 V).
The burner control will automatically make a restart attempt when the supply voltage returns to a level above AC 160 V and AC 75 V respectively.

Reversed polarity protection

If the connections of live conductor (terminal 12) and neutral conductor (terminal 2) are mixed up, the burner control will initiate lockout at the end of «TSA».

Startup sequence

A – C Startup sequence

A **Start command** (switching on)
This command is triggered by control thermostat / pressure controller «R».
Terminal 12 receives voltage and the programming mechanism starts running.
On completion of waiting time «tw» with the LGB21..., or after air damper «SA» has reached the nominal load position (on completion of «t11») with the LGB22... / LGB32..., fan motor «M» will be started.

TSA **Ignition safety time**
On completion of «TSA», a flame signal must be present at terminal 1.
That flame signal must be continuously available until shutdown occurs, or else flame relay «FR» will be deenergized, resulting in lockout.

tw **Waiting time**
During the waiting time, air pressure monitor «LP» and flame relay «FR» are tested for correct contact positions.

t1 **Prepurge time**
Purging the combustion chamber and the secondary heating surfaces:
required with low-fire air volumes when using the LGB21... and with nominal load air volumes when using the **LGB22... / LGB32...**
The «Type summary» and the «Function and sequence diagrams» show the so-called **prepurge time «t1»** during which air pressure monitor «LP» must indicate that the required air pressure is available.
The effective prepurge time «t1» comprises interval end «tw» through «t3».

t3 **Preignition time**
During «t3» and up to the end of «TSA», flame relay «FR» is forced to close.
On completion of «t3», the release of fuel is triggered at terminal 4 or at terminal 11 of the LGB41...

t3n **Postignition time**
Ignition time during «TSA»
Just before reaching the end of «TSA», ignition transformer «Z» will be switched off.
This means that «t3n» is somewhat shorter than «TSA».
This is necessary in order to give the forcedly closed flame relay «FR» sufficient time to drop out if there is no flame.

t4 **Interval**
LGB21... / LGB41...: time to the release of the second fuel valve «BV2»
LGB22... / LGB32...: on completion of «t4», the heat source is controlled depending on the load (release of load controller «LR»)

t9 **Second safety time**
(Only with LGB41...)
For pilot burners with main flame supervision equipped with a pilot gas valve «ZV1».

t10 **Specified time for air pressure signal**
On completion of this period of time, the set air pressure must have built up, or else lockout will occur.

t11 **Programmed opening time for actuator «SA»**
(Only with LGB22... / LGB32...)
The air damper opens until the nominal load position is reached. Only then will fan motor «M» be switched on.

t12 **Programmed closing time for actuator «SA»**
(Only with LGB22... / LGB32...)
During «t12», the air damper travels to the low-fire position.

B – B´ **Interval for establishment of flame**

C **Burner operating position reached**

C – D **Burner operation** (generation of heat)
Nominal output or, in connection with a load controller «LR», part load operation.

D **Shutdown by «R»**
The burner is immediately shut down and the programming mechanism is ready for a new start.

Control sequence in the event of fault

In principle, whenever lockout occurs, the fuel supply will immediately be shut down. If that takes place between startup and preignition, which is not indicated by a symbol, the usual cause is air pressure monitor «LP» shutting down, or a premature, faulty flame signal.

• **After a mains failure or in the event of undervoltage:**	New startup with full program sequence on power restoration
• **Premature flame signal** from the start of «t1»:	Immediate lockout
• **Contacts of air pressure monitor** «LP» have welded during «tw»:	Prevention of startup
• **No air pressure signal:**	Lockout on completion of «t10»
• **Air pressure failure** on completion of «t10»:	Immediate lockout
• **Burner does not ignite:**	Lockout on completion of «TSA»
• **Flame is lost during operation:**	Immediate lockout

Lockout

After lockout, the LGB... will remain locked (lockout cannot be changed).
This status will also be maintained in the event of a mains voltage failure.

Resetting the LGB...

Whenever lockout occurs, the burner control can immediately be reset.

Lockout and control sequence indication

The position of the programming mechanism can be seen through the viewing window on the front of the unit. In the event of fault, the programming mechanism stops and thus the lockout indicator also. The symbol in the viewing window indicates both the position in the control sequence and the type of fault according to the following legend:

◀	No startup since the start control loop is open
IIII	Interval «tw» or «t10» (LGB21...) Interval «tw» or «t11» (LGB22... / LGB32...) Interval «tw», «t3» or «TSA» (LGB41...)
▲	Air damper fully open (LGB22... / LGB32...)
P	Lockout due to absence of air pressure signal
←←←	Interval «t1», «t3» and «TSA» (LGB21...) Interval «t1», «t3» («t12») (LGB22... / LGB32...)
▼	Release of fuel
1	Lockout since there is no flame signal on completion of the first safety time
2	Release of second fuel valve (LGB21... / LGB41...) Release of load controller (LGB22... / LGB32...)
3	Lockout since there is no flame signal on completion of the second safety time (LGB41...)
●●●●	Part load or nominal load operation (or return to the operating position)

LGB21...

Burner controls for single- or 2-stage forced draft burners.
Air damper control for prepurging with **low-fire air volume**.

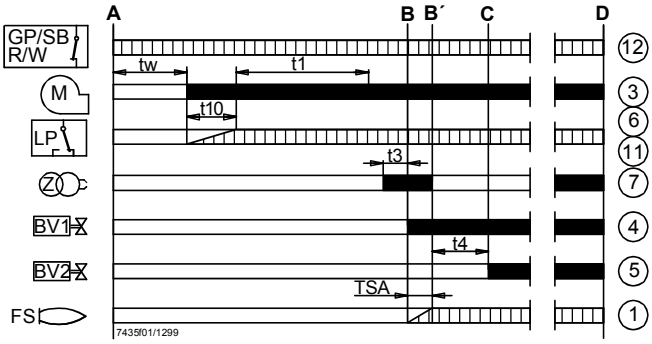

Application examples
Control of actuators of 2-stage or 2-stage modulating burners.
Prepurging («t1») with low-fire air volume.
Same low-fire actuator position (switching cam III) during startup and operation!

For information about actuators «SA»:
SQN3...: refer to Data Sheet 7808
SQN7...: refer to Data Sheet 7804
SQN9...: refer to Data Sheet 7806

Flame supervision

LGB21...: with ionization probe or auxiliary unit AGQ1...A27 for UV detector QRA...

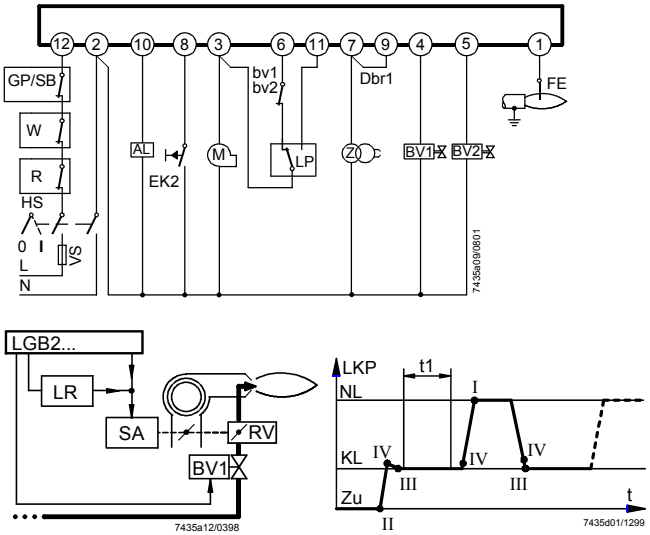

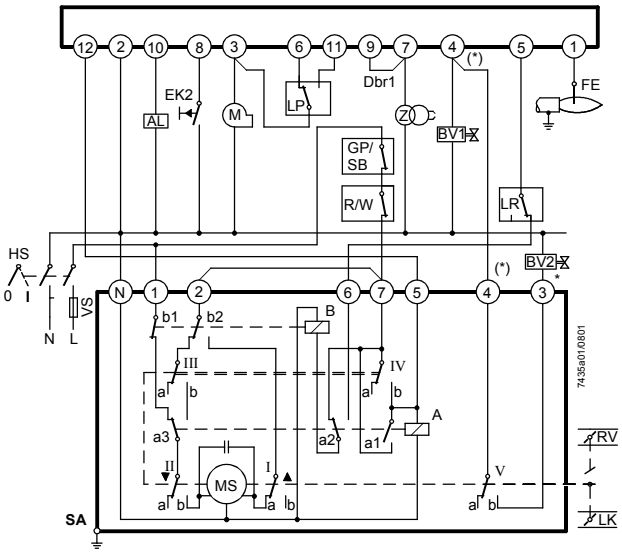

SQN3...121...

*** Note:**
With 2-stage modulating burners (with gas regulation damper «RV»), «BV2» and the dotted connection between terminals (*) are not required

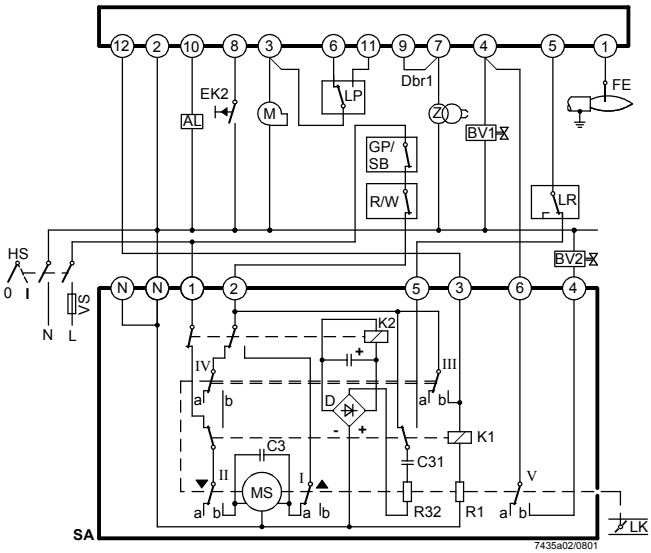

SQN91.140... / 2-stage control

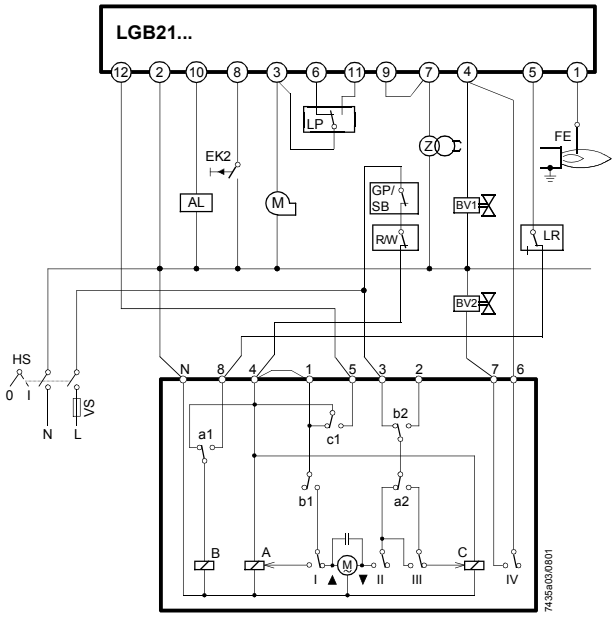

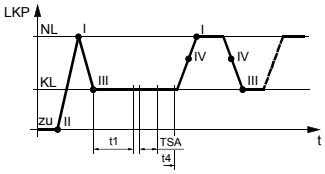

SQN7...244 / 2-stage control

Burner without fan assistance and **without «LP»**

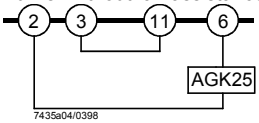

Burner with fan control via auxiliary contactor («HS») **with «LP» (does not apply to LGB41...)**

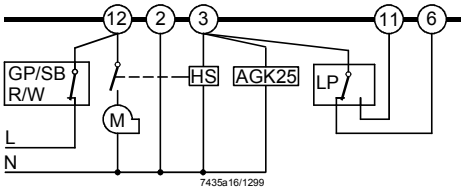

QRC1... with LGB3... (diagram 7435a02)

QRA... with auxiliary unit AGQ1... with LGB2... / LGB4... (diagram 7435a06)

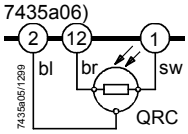

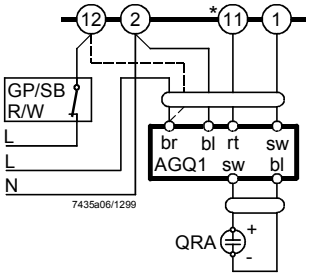

Legend

bl Blue wire

br Brown wire

rt Red wire

sw Black wire

* With LGB41... terminal 3

LGB22... / LGB32...

Burner controls for single- or 2-stage forced draft burners.
Air damper control for prepurging with **nominal load air volume**.

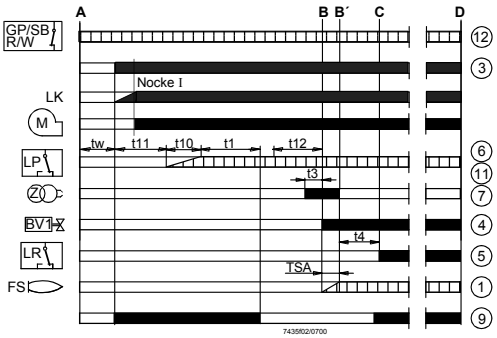

Application examples
Control of actuators of 2-stage or 2-stage modulating burners.
Prepurging («t1») with nominal load air volume.

For information about the actuators:
SQN3...: refer to Data Sheet 7808
SQN7...: refer to Data Sheet 7804
SQN9...: refer to Data Sheet 7806

Flame supervision

LGB22...: with ionization probe or auxiliary unit AGQ1... for UV detector QRA...
LGB32...: with blue-flame detector QRC1...

Only LGB22... **Only LGB32...**

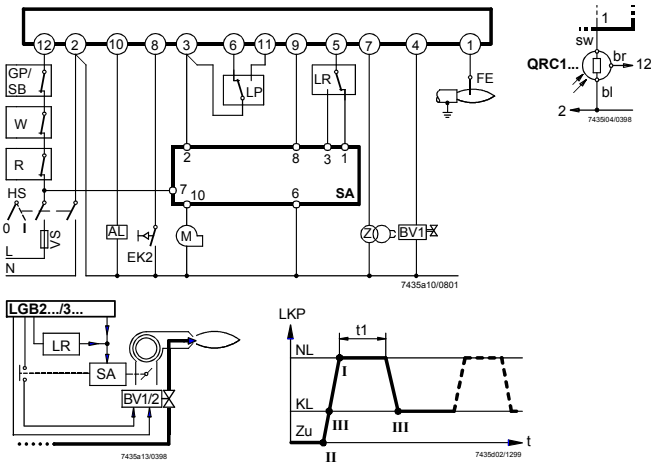

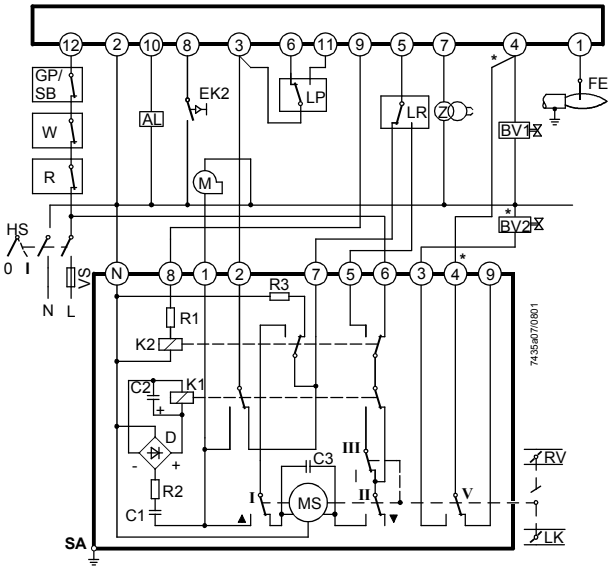

SQN3...151... or SQN3...251...

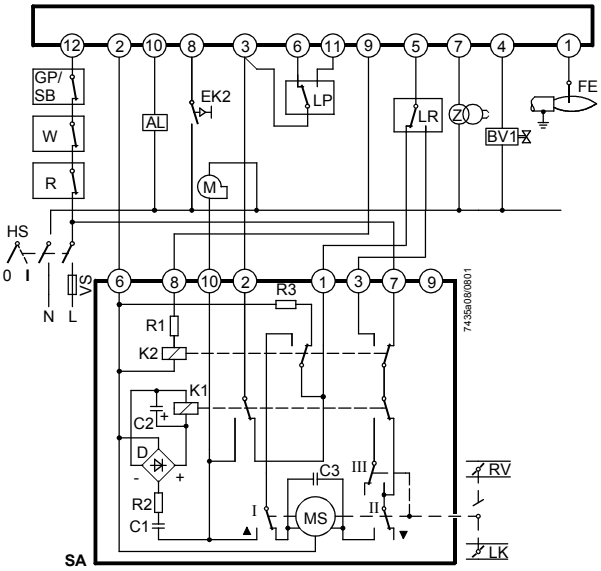

SQN90.220... / 2-stage modulating control

*** Note:**
With 2-stage modulating burners (with gas regulation damper «RV»), «BV2» and the dotted connection between terminals marked (*) are not required.

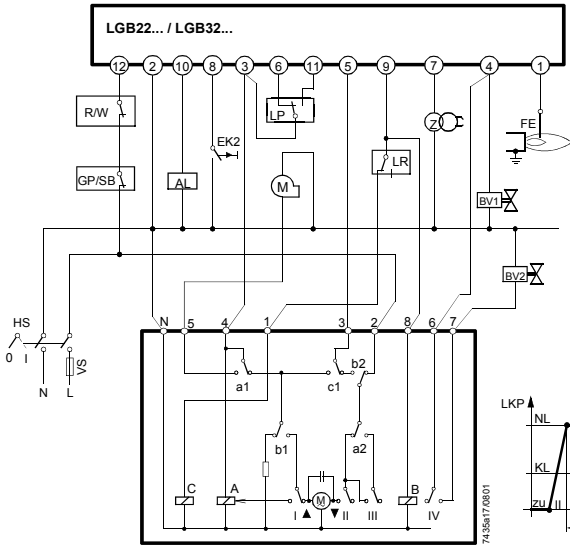

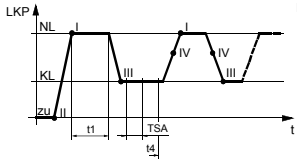

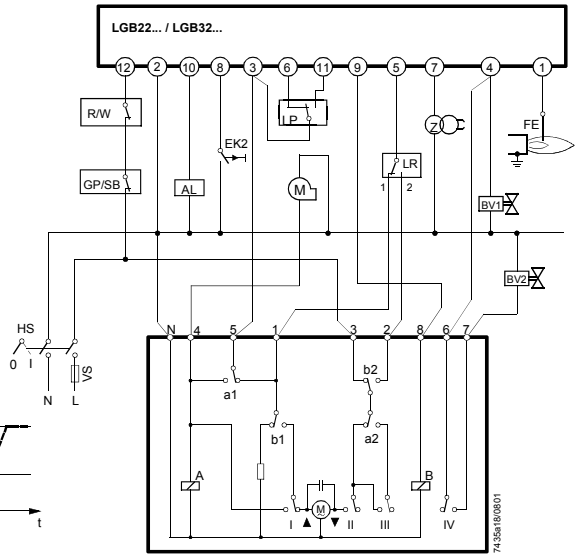

SQN7...454 / 2-stage control
Single-wire control

SQN7...424 / 2-stage control
2-wire control

Legend

TSA	Ignition safety time
t1	Prepurge time
t4	Interval «BV1 – BV2»
	LGB22... / LGB32...: interval «BV1 - LR»

AL	Alarm	LR	Load controller
BV...	Fuel valve	M	Fan motor
EK2	Remote reset button	NL	Nominal load
FE	Ionization probe	R	Control thermostat or pressure controller
GP	Gas pressure monitor	SB	Safety limit thermostat
HS	Mains isolator	VS	Primary fuse
KL	Low-fire	W	Limit thermostat
LKP	Air damper position	Z	Ignition transformer
LP	Air pressure monitor		

LGB41...

Burner controls for atmospheric gas burners with or without fan assistance. No actuator control. Flame supervision with ionization probe

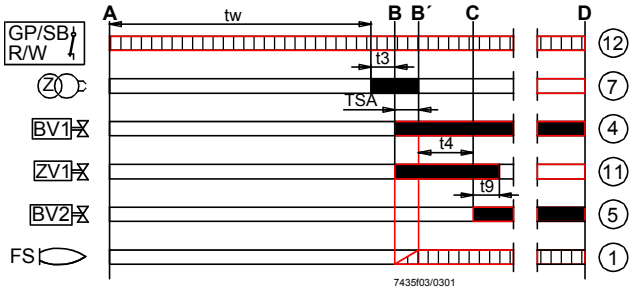

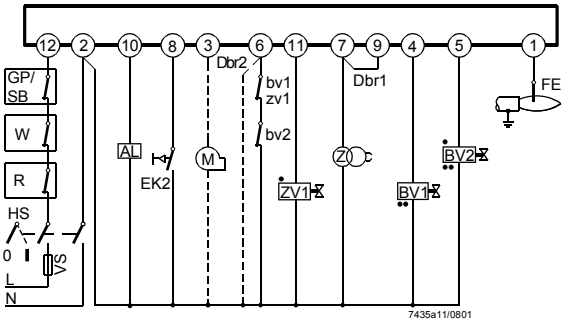

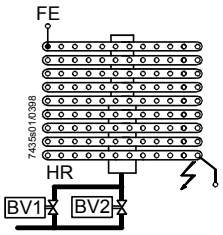

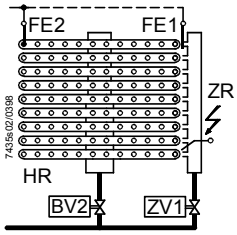

Legend

A	Startup (switching on by «R»)	AL	Alarm
B – B´	Interval for establishment of flame	BV...	Fuel valve
C	Operating position of burner or release of the second stage by load controller«LR»	bv...	Auxiliary switch in the fuel valves (for checking the fully closed position)
D	Shutdown by «R»	Dbr1	Wire link
		Dbr2	Wire link, required when contact «bv» or «zv1» is missing
tw	Waiting time	EK2	Remote reset button
TSA	Ignition safety time	FE...	Ionization probe
t3	Prepurge time	FS	Flame signal
t4	Interval «BV1 – BV2»	GP	Gas pressure monitor
t9	Second safety time	HR	Main burner
		HS	Mains isolator
		M	(Auxiliary) fan motor
▥	Required input signals	R	Control thermostat or pressure controller
■	Burner control's output signals	SB	Safety limit thermostat
		VS	Primary fuse
		W	Limit thermostat
•	Connection of valves with pilot burners with main flame supervision	Z	Ignition transformer
		ZR	Pilot burner
••	Connection of valves with 2-stage atmospheric burners with supervision of the first stage («BV1»)	ZV1	Pilot gas valve
		zv1	Auxiliary switch in the pilot gas valve

Internal diagram and time diagram of the programming mechanisms

LGB21...

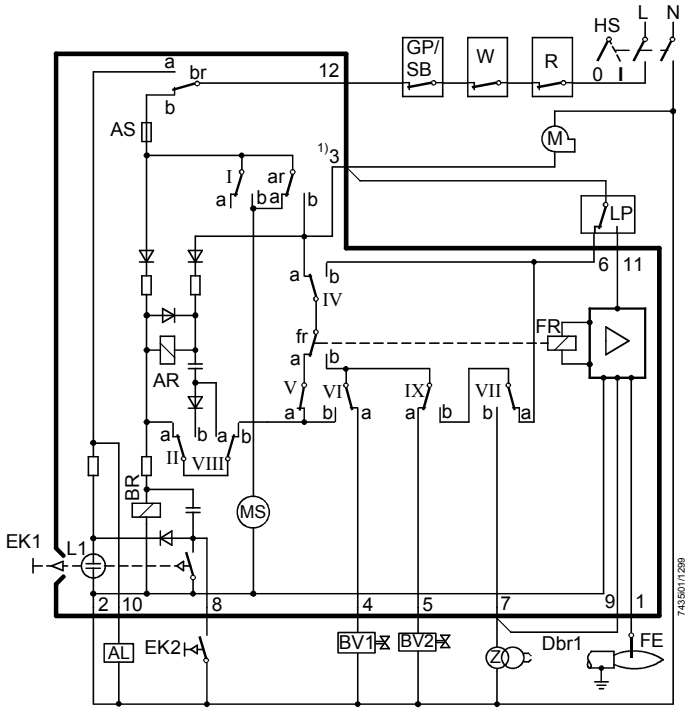

Legend

AL	Alarm
AR	Load relay with contact «ar»
AS	Unit fuse
BR	Locking relay with contact «br»
BV...	Fuel valve
Dbr1	Wire link
EK...	Lockout reset button
FE	Ionization probe
FR	Flame relay
GP	Gas pressure monitor
HS	Mains isolator
L1	Lockout warning lamp
LP	Air pressure monitor
M	Fan motor
MS	Synchronous motor
R	Control thermostat or pressure controller
SB	Safety limit thermostat
W	Limit thermostat or pressure monitor
Z	Ignition transformer

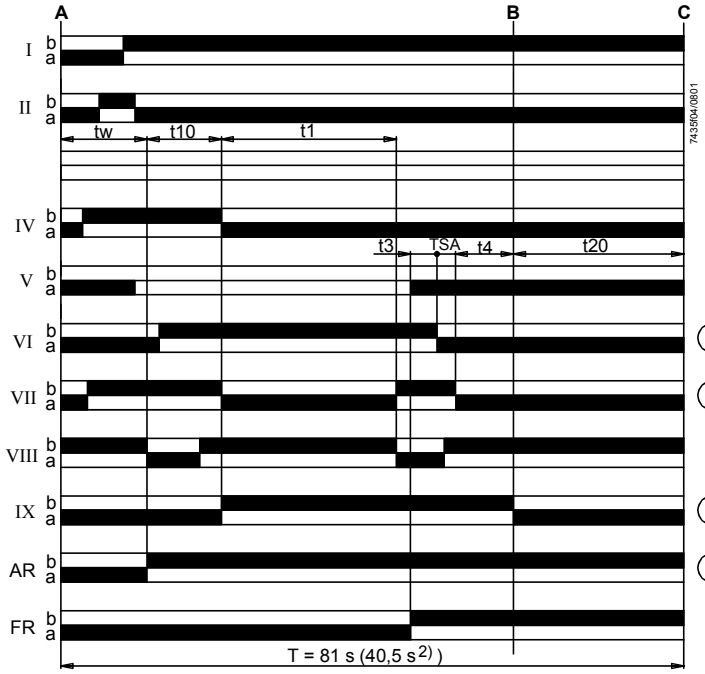

A	Start position (switching on)
B	Operating position of burner
C	Operating position of programming mechanism or start position
I...IX	Cam switches
tw	Waiting time
TSA	Ignition safety time
T	Total running time of programming mechanism
t1	Prepurge time
t3	Preignition time
t4	Interval «BV1 – BV2»
t10	Specified time for air pressure signal
t20	Interval up to self-shutdown of the programming mechanism
1)	Resistance between terminal 3 and «N» may not exceed 1.6 kΩ
2)	Only with LGB21.130A27

LGB22... / LGB32...

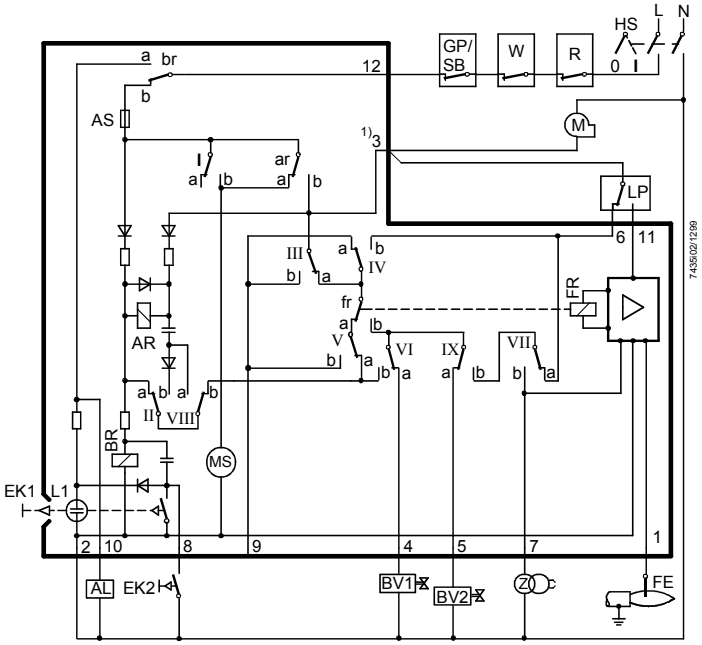

Legend

AL	Alarm
AR	Load relay with contact «ar»
AS	Unit fuse
BR	Locking relay with contact «br»
BV...	Fuel valve
EK...	Lockout reset button
FE	Ionization probe
FR	Flame relay
GP	Gas pressure monitor
HS	Mains isolator
L1	Lockout warning lamp
LP	Air pressure monitor
M	Fan motor
MS	Synchronous motor
R	Control thermostat or pressure controller
SB	Safety limit thermostat
W	Limit thermostat or pressure monitor
Z	Ignition transformer

Only LGB32...

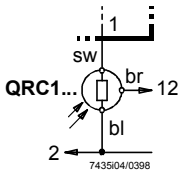

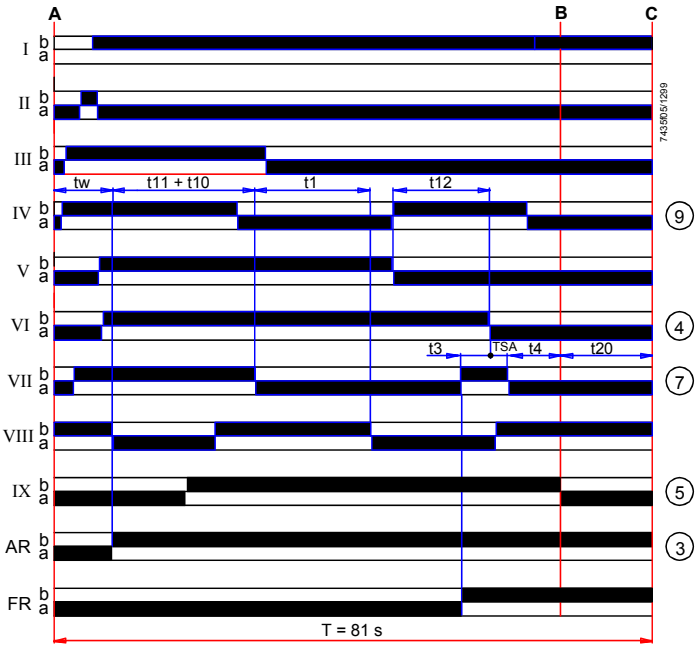

A	Start position (switching on)
B	Operating position of burner
C	Operating position of programming mechanism or start position
I...IX	Cam switches
tw	Waiting time
TSA	Ignition safety time
T	Total running time of programming mechanism
t1	Prepurge time
t3	Preignition time
t4	Interval «BV1 – BV2» or «BV1 – LR»
t10	Specified time for air pressure signal
t11	Programmed opening time for actuator «SA»
t12	Programmed closing time for actuator «SA»
t20	Interval up to self-shutdown of the programming mechanism
1)	Resistance between terminal 3 and «N» may not exceed 1.6 kΩ

Only LGB41...

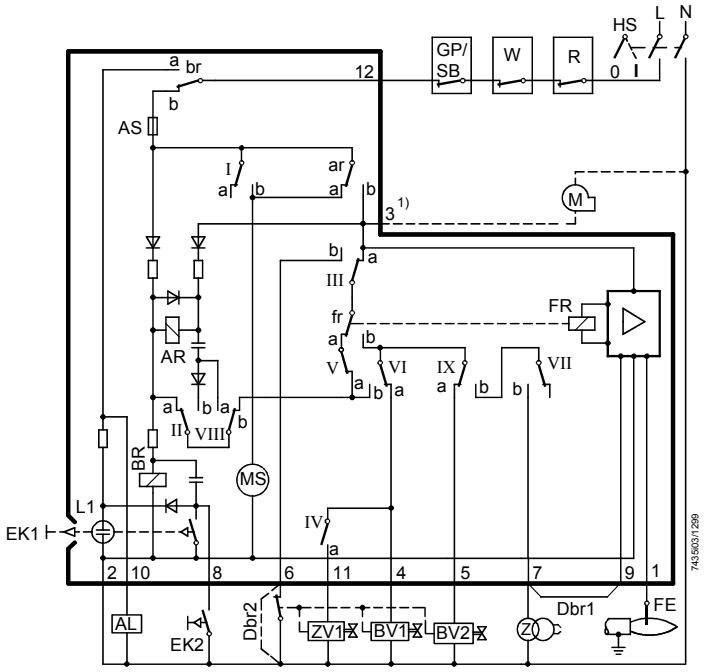

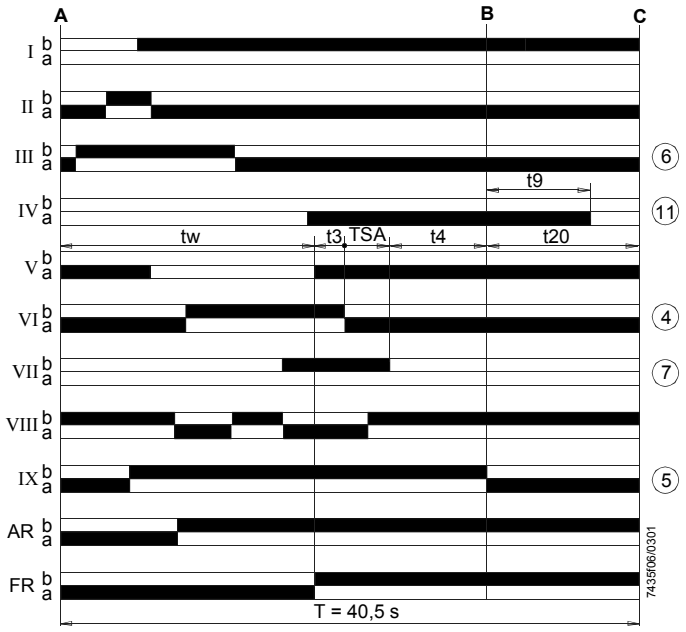

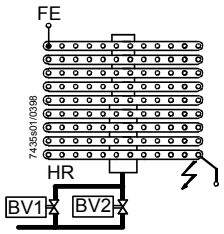

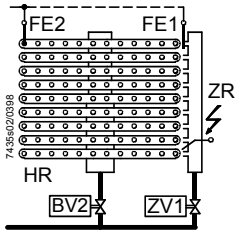

Legend

AL	Alarm
AR	Load relay with contact «ar»
AS	Unit fuse
BR	Locking relay with contact «br»
BV...	Fuel valve
Dbr1	Wire link
Dbr2	Wire link terminal 6-2 required when contact «bv» or «zv1» is missing
EK...	Lockout reset button
FE	Ionization probe
FR	Flame relay
GP	Gas pressure monitor
HR	Main burner
HS	Mains isolator
L1	Lockout warning lamp
M	Fan motor
MS	Synchronous motor
R	Control thermostat or pressure controller
SB	Safety limit thermostat
W	Limit thermostat or pressure monitor
Z	Ignition transformer
ZR	Pilot burner
ZV1	Pilot gas valve in place of «BV1» in the case of pilot burners with main flame supervision
tw	Waiting time
TSA	Ignition safety time
T	Total running time of programming mechanism
t3	Preignition time
t4	Interval «BV1 – BV2»
t9	Second safety time
t20	Interval up to self-shutdown of the programming mechanism
A	Start position (switching on)
B	Operating position of burner
C	Operating position of programming mechanism or start position
I...IX	Cam switches
1)	Resistance between terminal 3 and «N» may not exceed 1.6 kΩ

Dimensions

Dimensions in mm

Burner control with plug-in base AGK11... and cable gland holder AGK65...

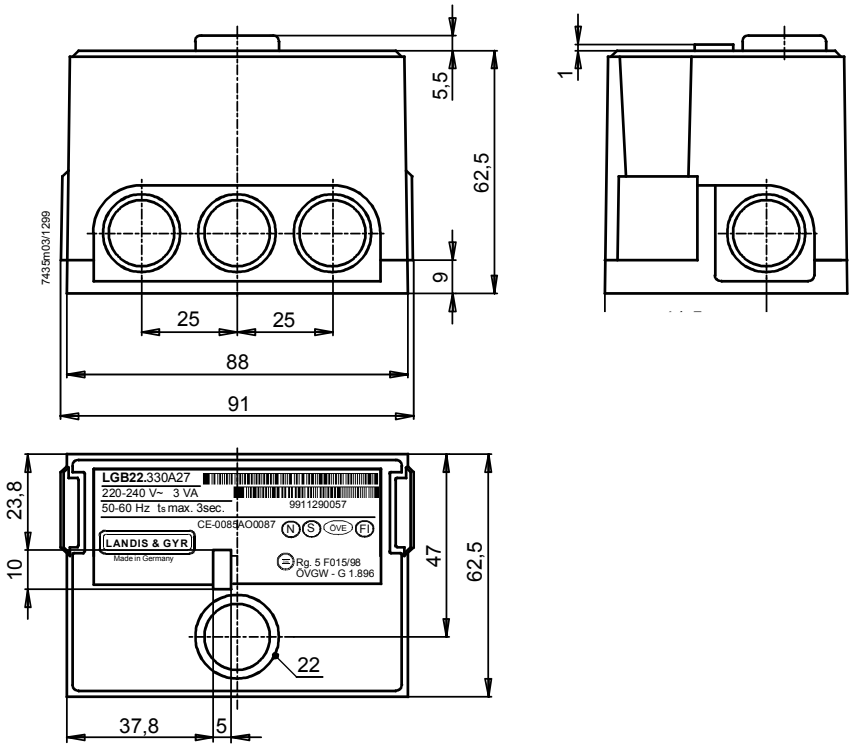

Auxiliary unit AGQ1...A27

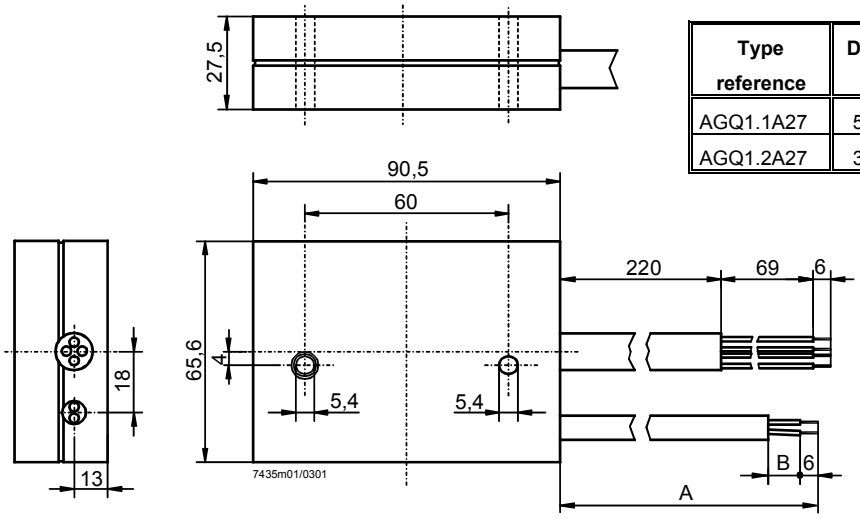

Type reference	Dimension A	Dimension B
AGQ1.1A27	500	19
AGQ1.2A27	300	34